24h

S 2010 100 t/m

α = 75⁰, R = 0.8 mm

α = 85⁰, R = 0.8 mm

α = 88⁰, R = 0.2 mm, 0.8 mm, 1.5 mm, 3 mm

α = 90⁰, R = 0.2 mm, 0.8 mm

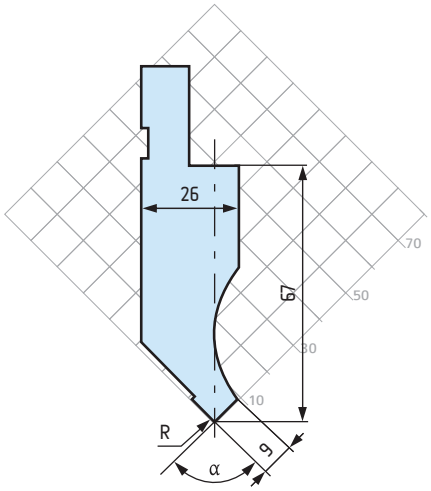

24h

S 2010/105 100 t/m

α = 75⁰, 85⁰, 88⁰

R = 0.8 mm

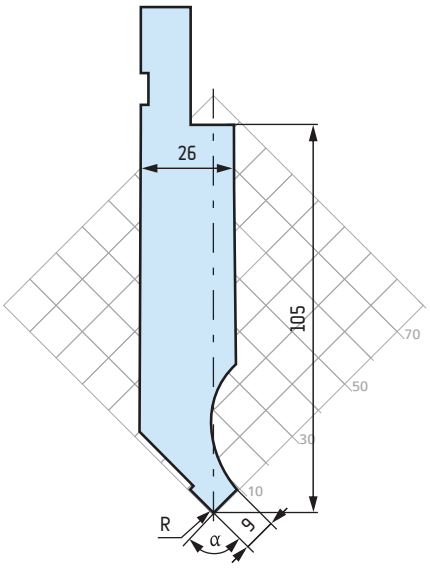

24h

S 2011 80 t/m

α = 45⁰

R = 0.4 mm, 0.8 mm, 1.5 mm

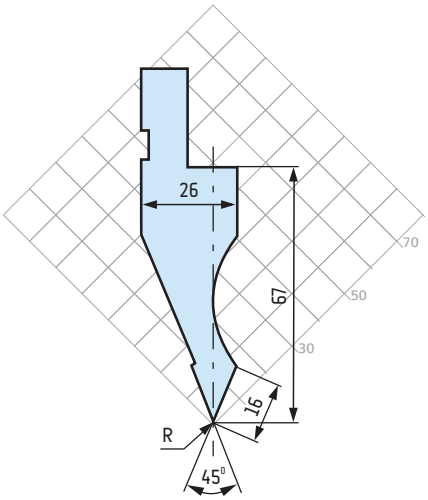

24h

S 2012 70 t/m

α = 30⁰, 35⁰

R = 1 mm

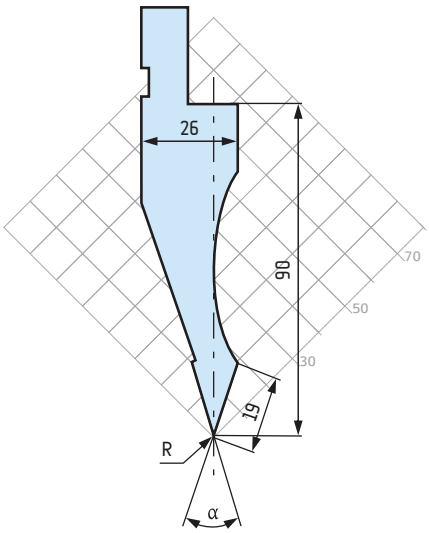

TYPE "A" PUNCHES | STEMPLE TYPU „A"

24h

S 2013 100 t/m

α = 35⁰, R = 5 mm

α = 60⁰, R = 6 mm

α = 80⁰, R = 6 mm

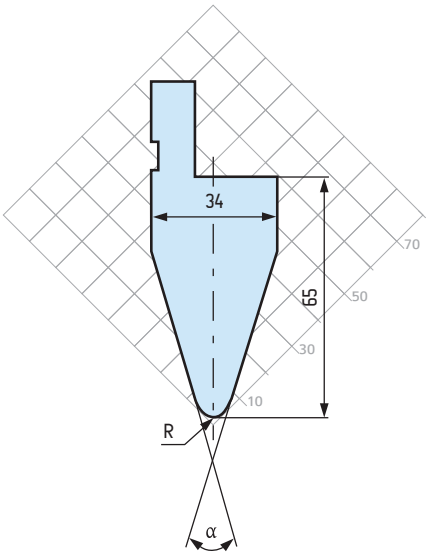

24h

S 2014 60 t/m*

*α = 75⁰, A = 9 mm, R = 0.8 mm, *30 t/m*

*α = 88⁰, A = 6 mm, R = 0.2 mm, 0.8 mm *50 t/m*

α = 88⁰, A = 9 mm, R = 0.2 mm, 0.8 mm

α = 90⁰, A = 9 mm, R = 0.8 mm

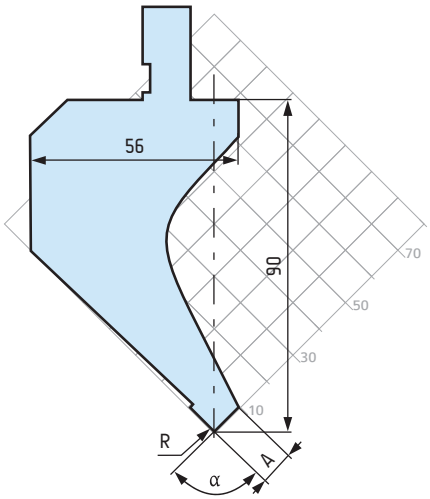

24h

S 2015 50 t/m

α = 85⁰, R = 0.8 mm

α = 88⁰, R = 0.2 mm, 0.8 mm,

α = 90⁰, R = 0.8 mm

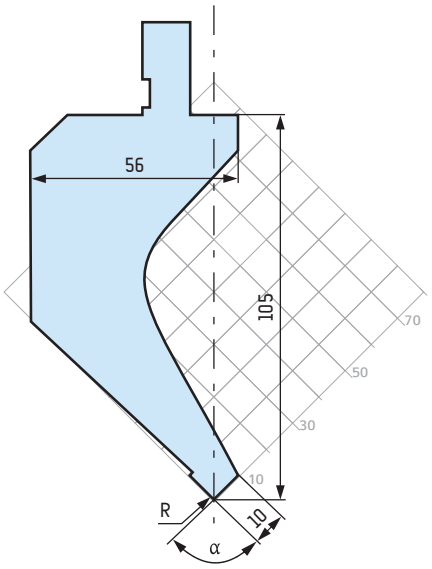

24h

S 2016 10 t/m

α = 88⁰, 90⁰

F = 0.6 mm

24h 42CrMo4

S 2016 20 t/m

α = 88⁰, 90⁰

F = 0.6 mm

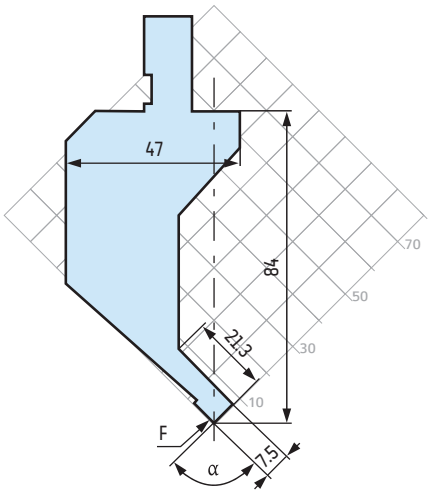

24h

S 2017/26 100 t/m

α = 26⁰

R/F = 0.8 mm

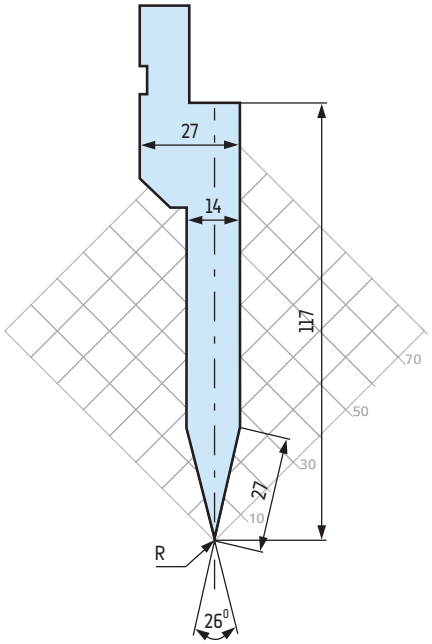

24h

S 2017/35 100 t/m

α = 35⁰

F = 0.8 mm

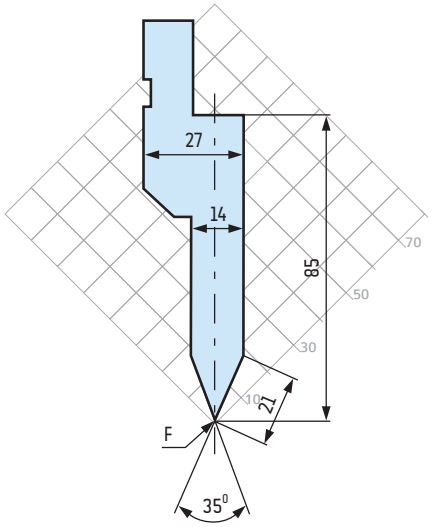

24h 42CrMo4

S 2017/30 40 t/m

α = 30⁰

R = 0.8 mm

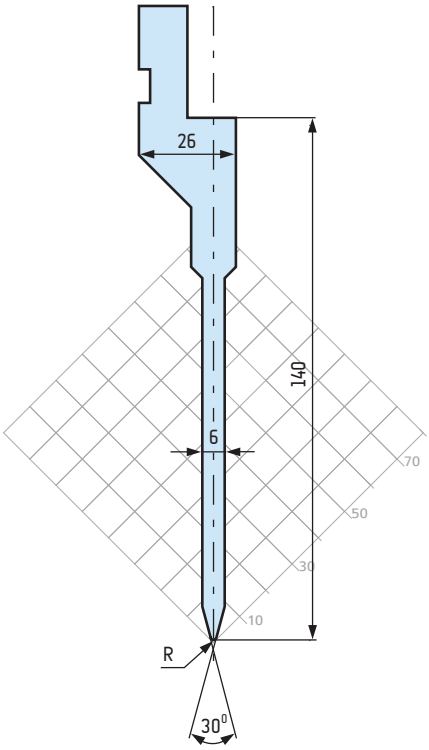

24h

S 2018 60 t/m

α = 60⁰

F = 0.8 mm

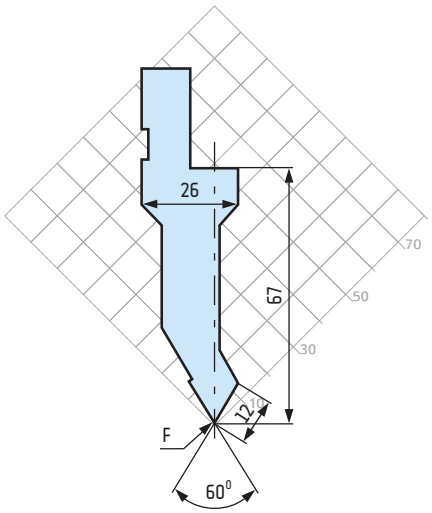

24h

S 2019 70 t/m

α = 88⁰

R = 0.8 mm

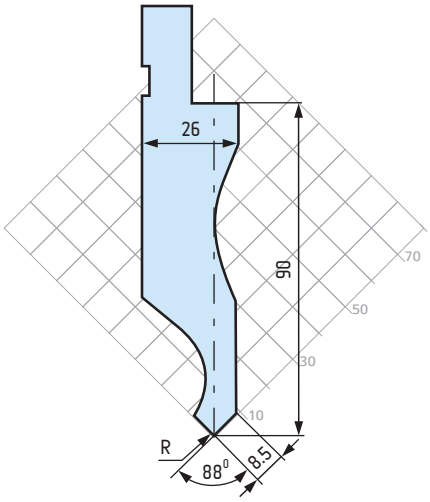

24h

S 2020 50 t/m

α = 75⁰, R = 0.8 mm

α = 88⁰, R = 0.2 mm, R = 0.8 mm

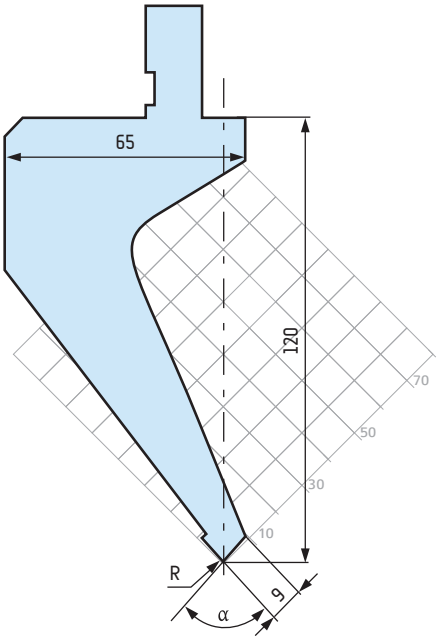

24h

S 2021 100 t/m

α = 30⁰

R = 0.8 mm

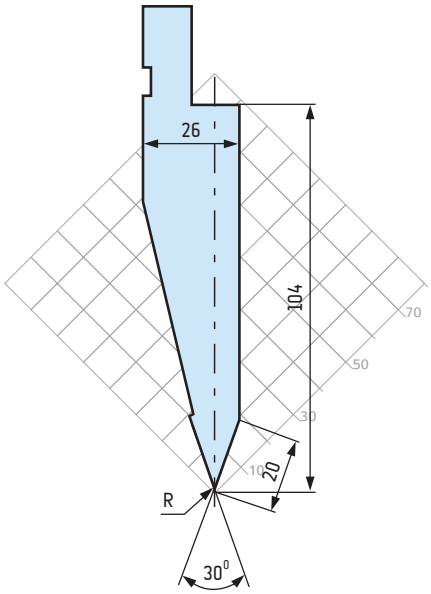

24h

S 2022 50 t/m

α = 75⁰, R = 0.8 mm

α = 88⁰, 90⁰, R = 0.2 mm

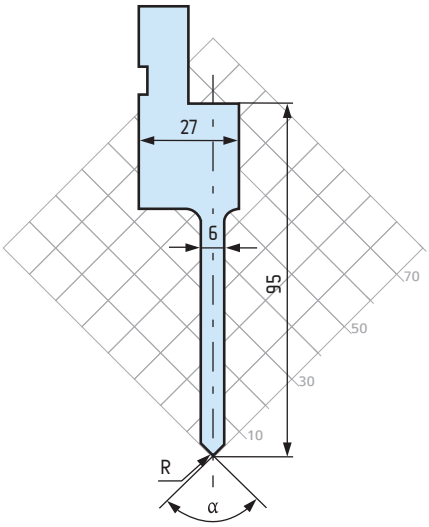

24h

S 2023 50 t/m

α = 88⁰, 90⁰

R = 0.2 mm

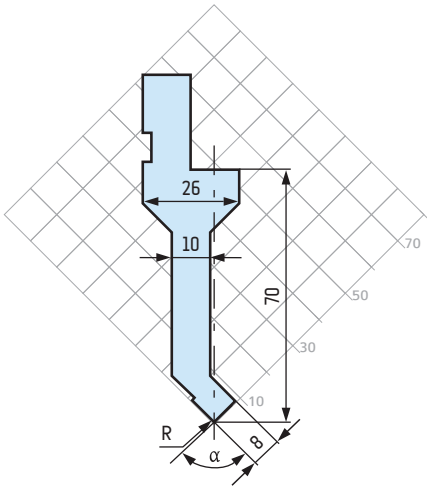

24h

S 2024 50 t/m

α = 88⁰, 90⁰

R = 0.2 mm

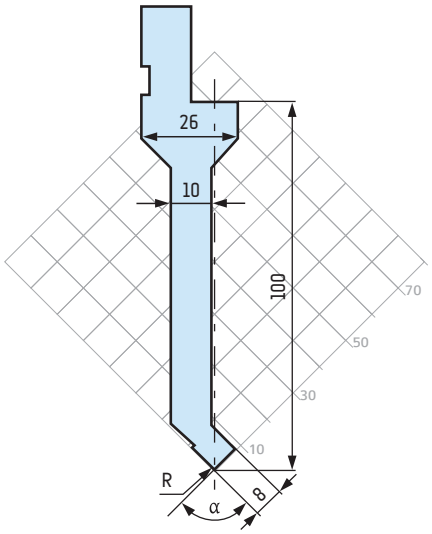

24h

S 2025 40 t/m

α = 88⁰, 90⁰

R = 0.2 mm

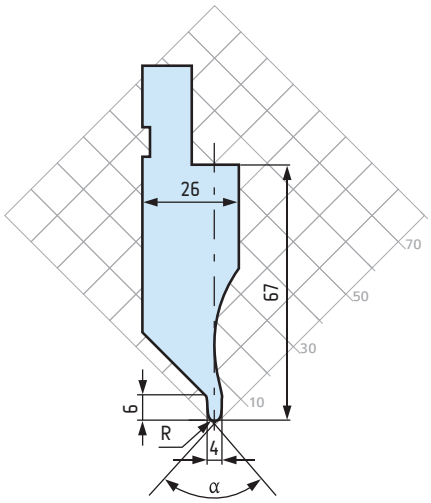

24h

S 2026 35 t/m

α = 88⁰, 90⁰

R = 0.2 mm

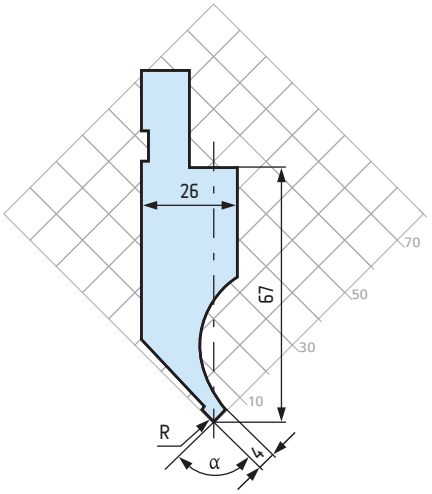

TYPE "A" PUNCHES | STEMPLE TYPU „A"

24h

S 2027 70 t/m

α = 30⁰

R = 0.8 mm

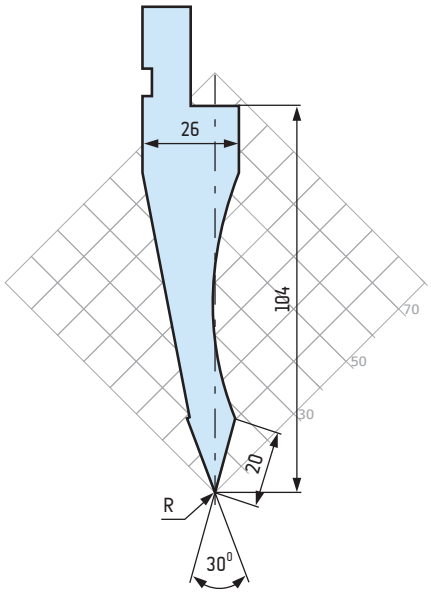

24h

S 2028 80 t/m

α = 88⁰

R = 0.8 mm

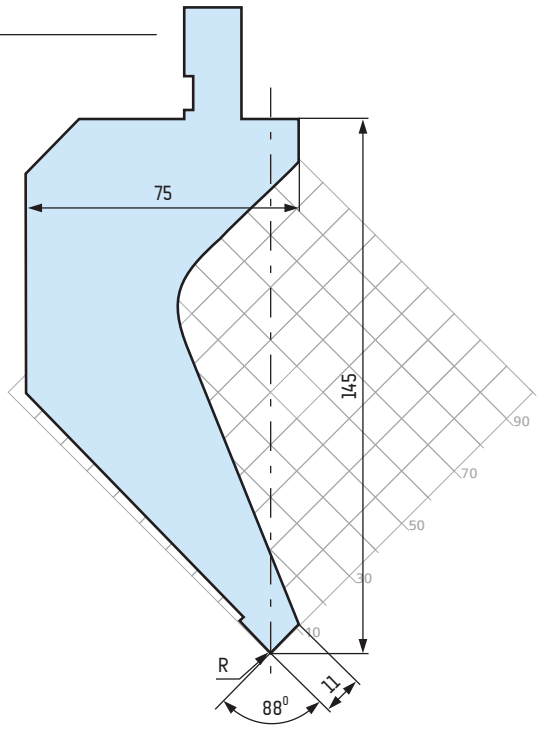

24h

S 2029 60 t/m

α = 85⁰

R = 5 mm, 6.5 mm

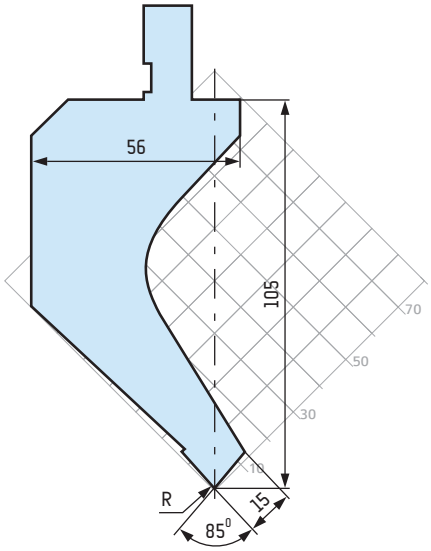

24h

S 2030 60 t/m

α = 88⁰

R = 0.8 mm

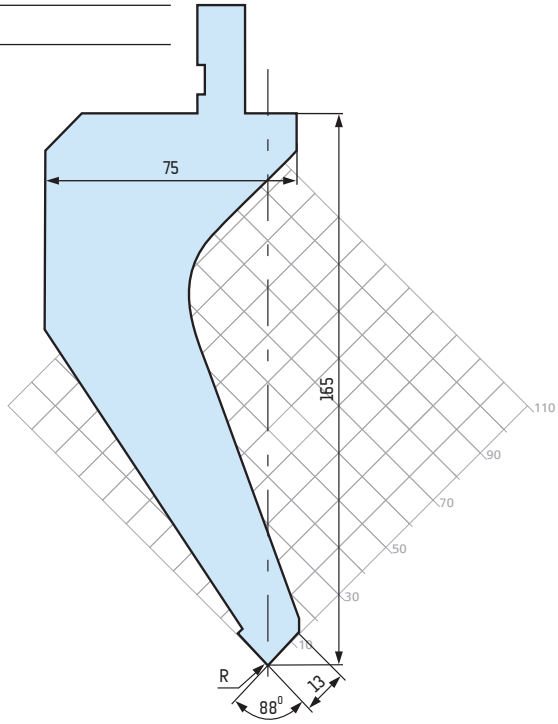

24h

S 2031 60 t/m

α = 60⁰

R = 0.8 mm

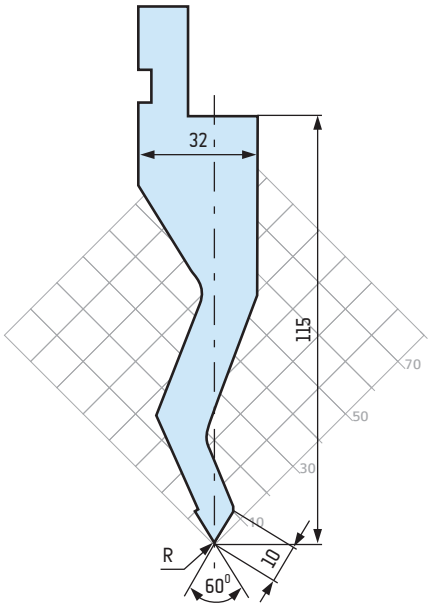

24h

S 2032 45 t/m

α = 88⁰

R = 0.8 mm

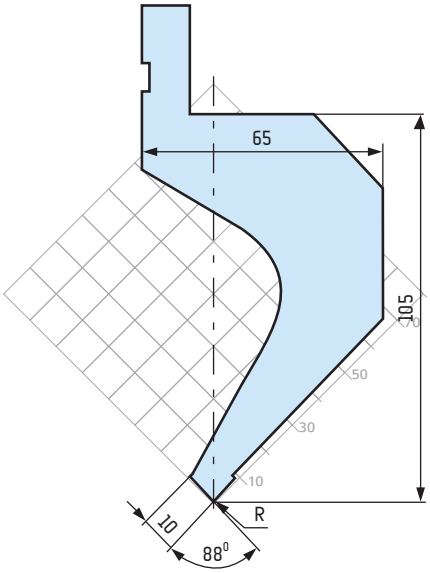

24h

S 2034 35 t/m

α = 60⁰

R = 0.8 mm

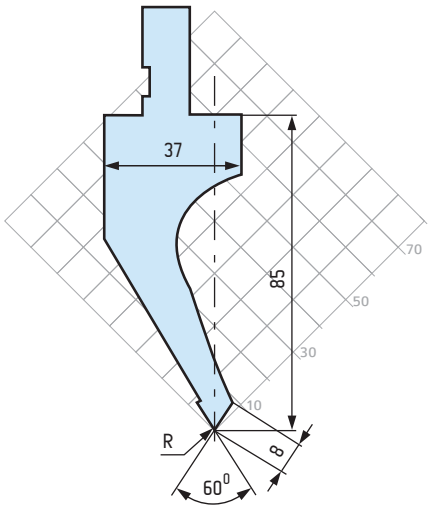

24h

S 2035 35 t/m

α = 60⁰

R = 0.8 mm

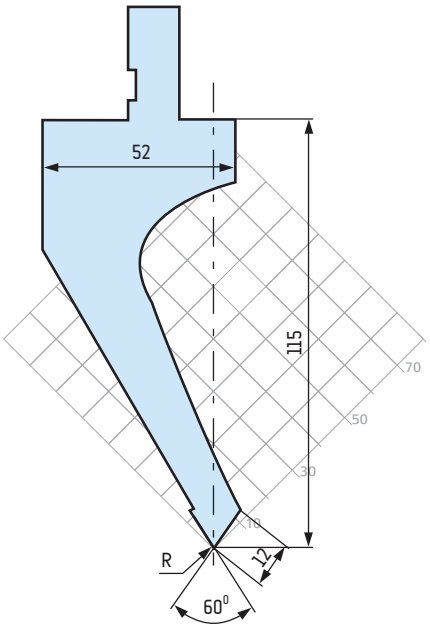

TYPE "A" PUNCHES | **STEMPLE TYPU „A"**

flattening tools | **zestaw do zagniatania**

24h 42CrMo4

S 2033 70 t/m

α = 28⁰

R = 0.6 mm, A=8 mm, 10 mm, 12 mm

24h 42CrMo4

M 3000 70 t/m

A = 8 mm, 10 mm, 12 mm

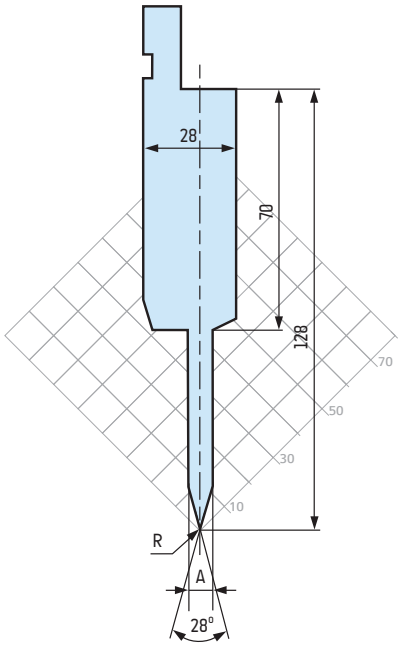

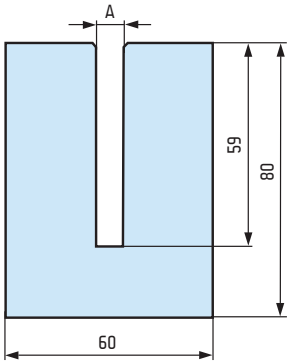

example of use S 2033 and M 3000 | **przykład zastosowania S 2033 i M 3000**

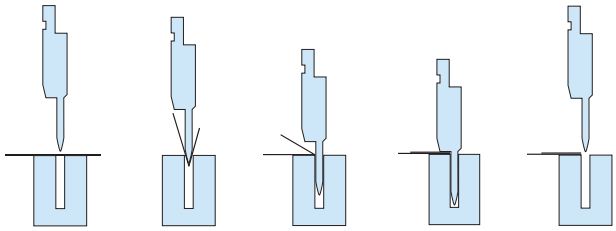

RADIUS PUNCHES | **STEMPLE PROMIENIOWE**
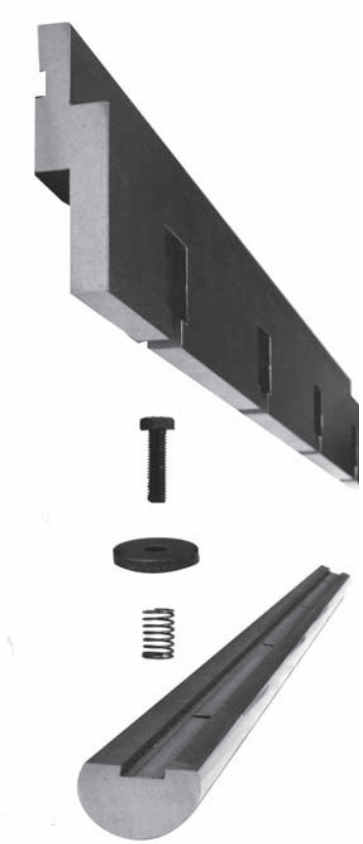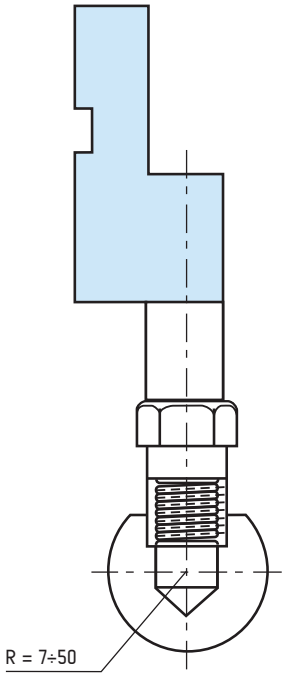
assembly | **sposób mocowania**